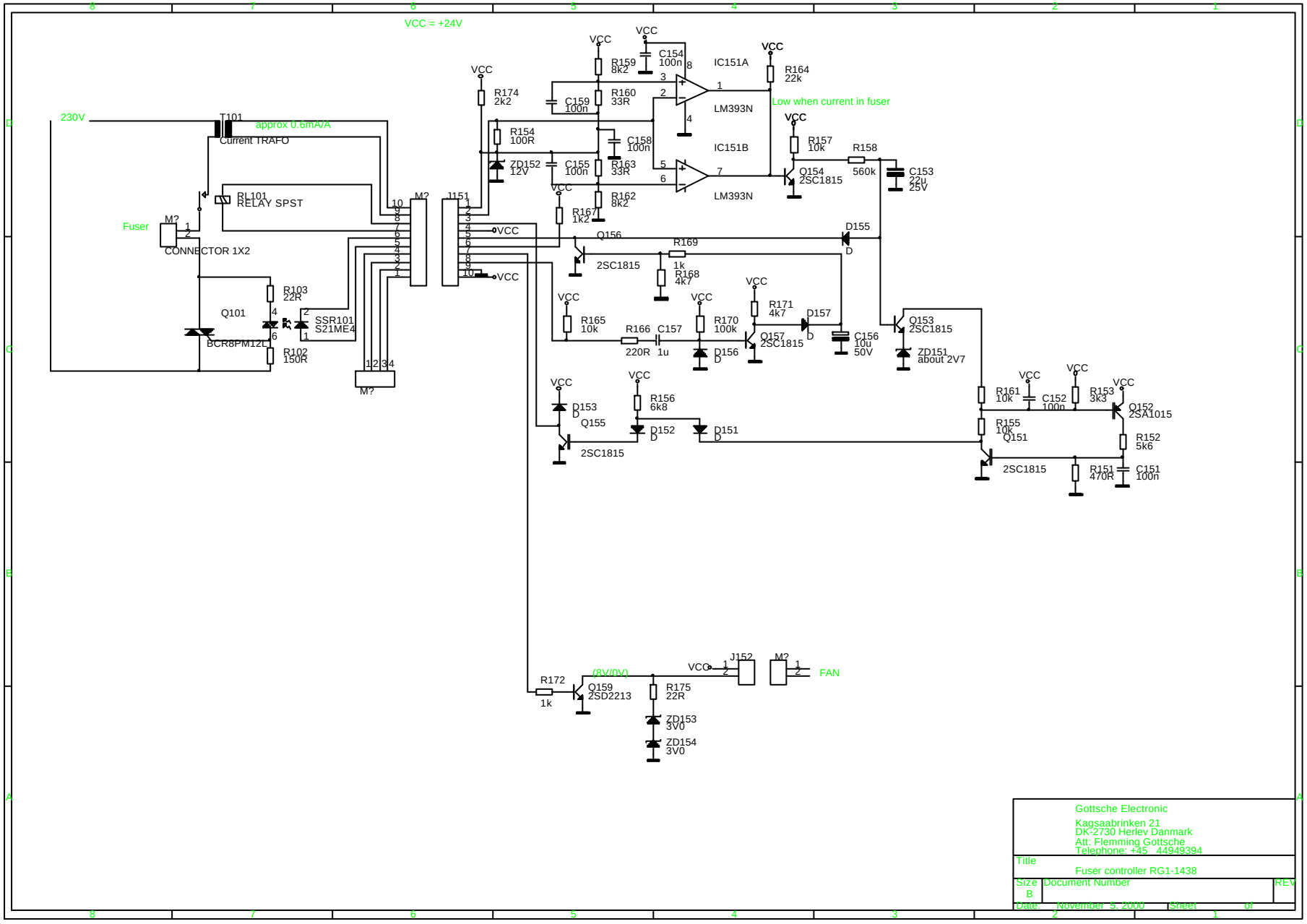
VCC = +24V
230V
T101
approx 0.6mA/A
Current TRAFO
RL101
RELAY SPST
Fuser
M?
CONNECTOR 1X2
R103
22R
Q101
BCR8PM12L
SSR101
S21ME4
R102
150R
M?
M?
J151
R174
2k2
R154
100R
ZD152
12V
R159
8k2
C154
100n
C159
100n
R160
33R
C158
100n
C155
100n
R163
33R
R162
8k2
R167
1k2
IC151A
LM393N
IC151B
LM393N
R164
22k
Low when current in fuser
R157
10k
R158
560k
Q154
2SC1815
C153
22u
25V
Q156
2SC1815
R169
1k
R168
4k7
D155
R165
10k
R166
220R
C157
1u
R170
100k
D156
R171
4k7
D157
Q157
2SC1815
C156
10u
50V
Q153
2SC1815
ZD151
about 2V7
D153
Q155
2SC1815
R156
6k8
D152
D151
R161
10k
C152
100n
R153
3k3
Q152
2SA1015
R155
10k
Q151
2SC1815
R152
5k6
R151
470R
C151
100n
R172
1k
Q159
2SD2213
(8V/0V)
R175
22R
ZD153
3V0
ZD154
3V0
J152
M2
FAN
Gottsche Electronic
Kagsaabrinken 21
DK-2730 Herlev Danmark
Att: Flemming Gottsche
Telephone: +45 44949394
Title
Fuser controller RG1-1438
Size
B
Document Number
REV
Date: November 5, 2000
Sheet
of